UPLIFTING COMPANY

AUTOP STENHOJ

Masterlift 2.35 NxT Saa 260

-Sportversion
Art.-Nr. 21212
min. ca.75 mm
max. ca. 100 mm
+50 mm pad extension

-Universalversion
Art.-Nr. 21214
min. ca.100 mm
max. ca.140mm

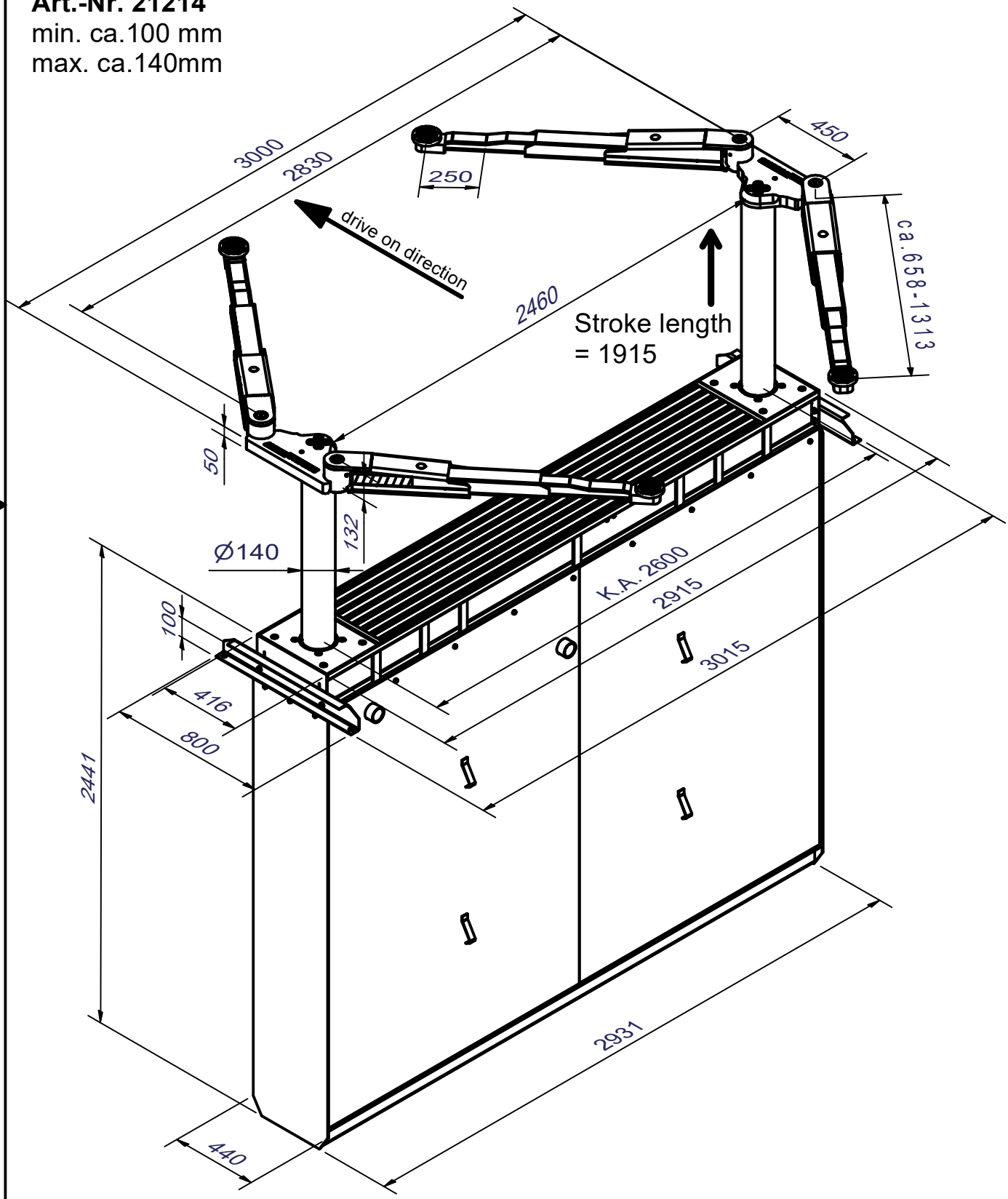

Dimensional sketch including drive-over heights

Prospekt-14068-21214.idw

Constructional changes are subject to modifications - Edition 26.07.2023