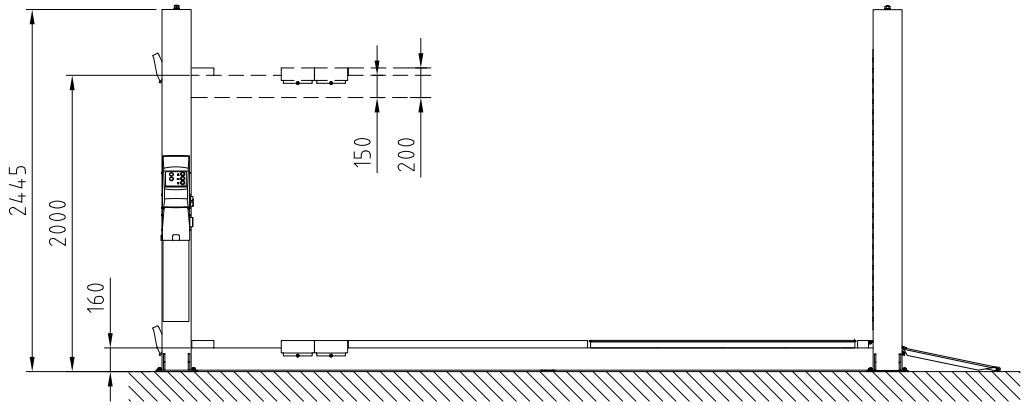

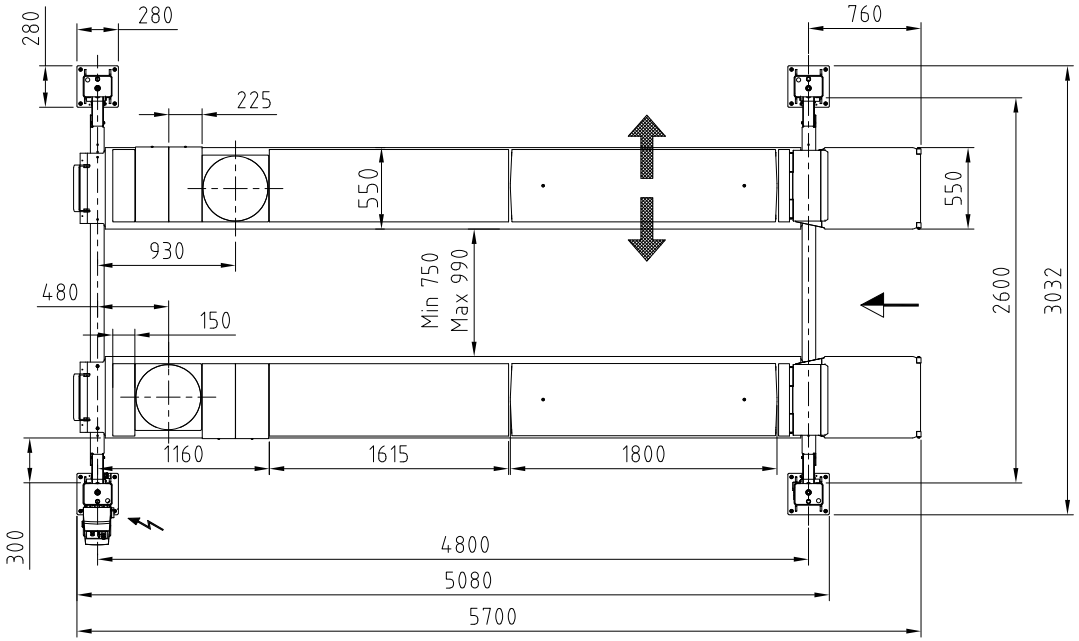

Note! Turn tables are not included in the delivery. Must be purchased locally.

Date: 090622	Sign. Ije	Scale: 1:35	No. T12388
UPLIFTING COMPANY AUTOP STENHOJ			Major 4.40-26-48-WL (4000 kg)
			Rev. date: