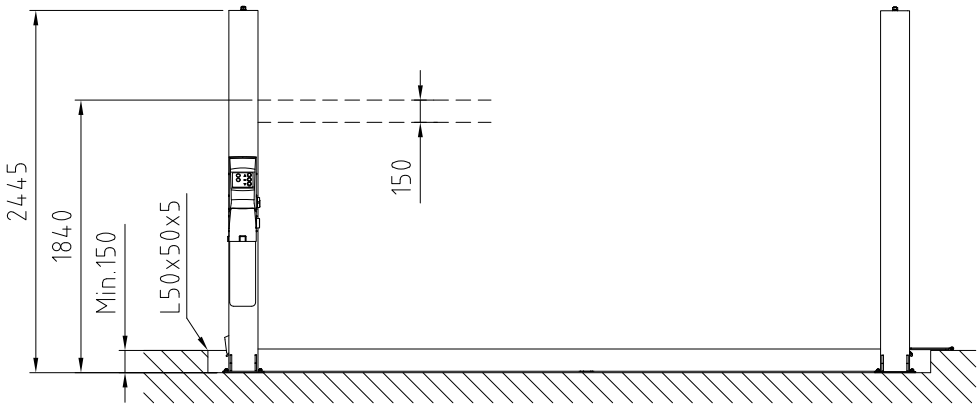

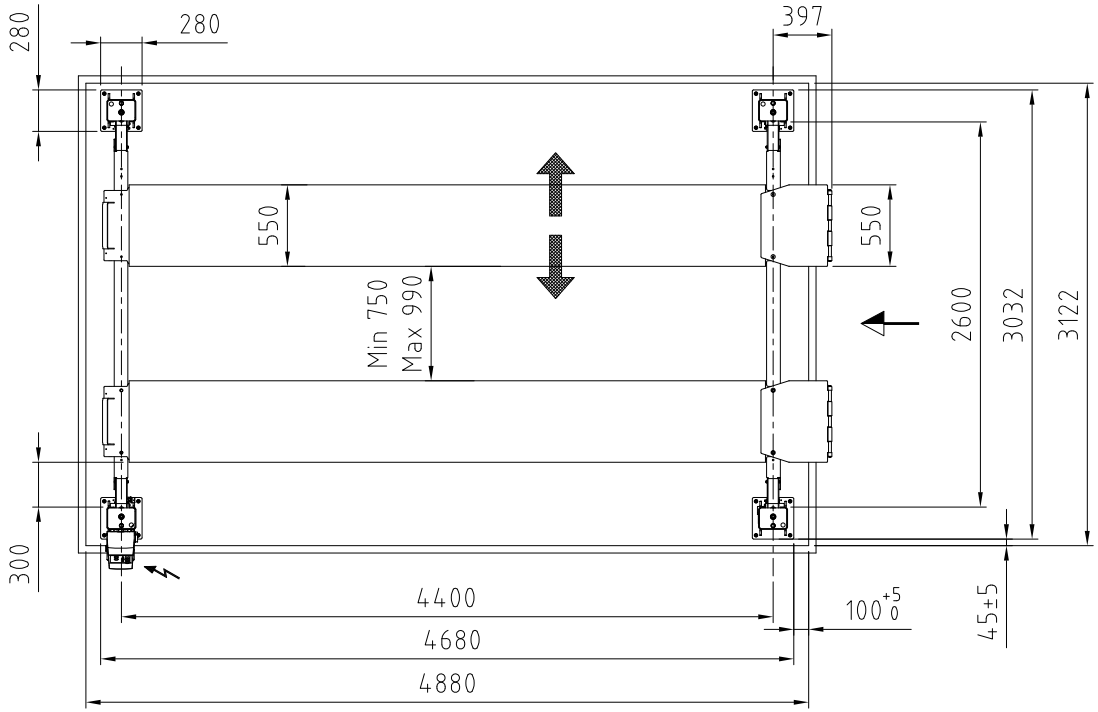

Date: 310522	Sign. Ije	Scale: 1:35	No. T12394
UPLIFTING COMPANY AUTOP STENHOJ			Major 4.40-26-44-S (4000 kg) recessed Rev. date: