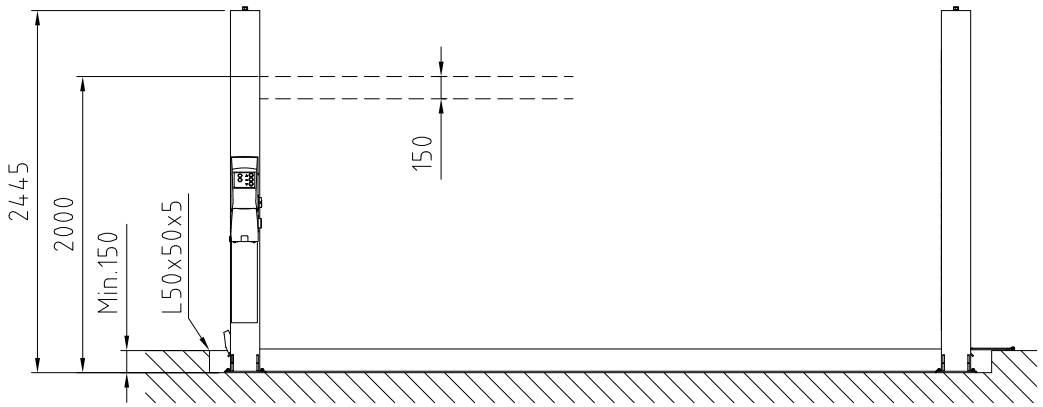

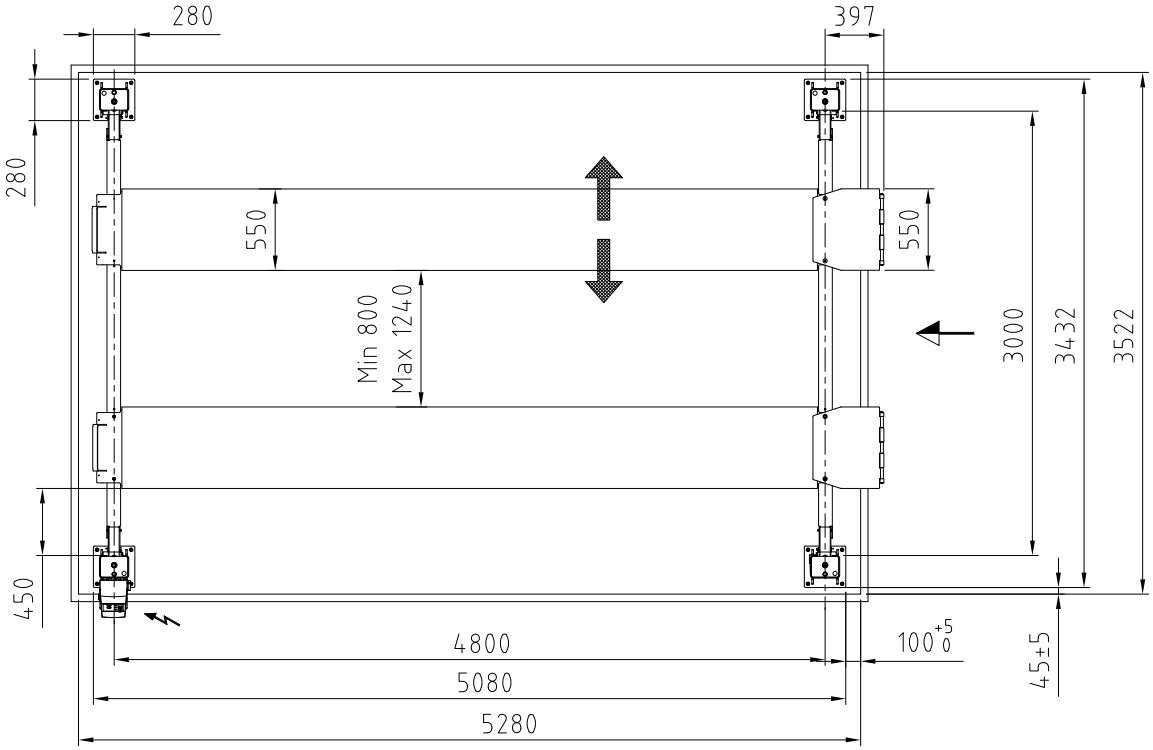

Date: 240522	Sign. Ije	Scale: 1:35	No. T12441
UPLIFTING COMPANY AUTOP STENHOJ			Major 4.40-30-48-S (4000 kg) recessed Rev. date: